Spring Loaded Casters *(Pat. No. 09687872)*

Series SP— Cap. to 1,630 lbs.

HAMILTON®

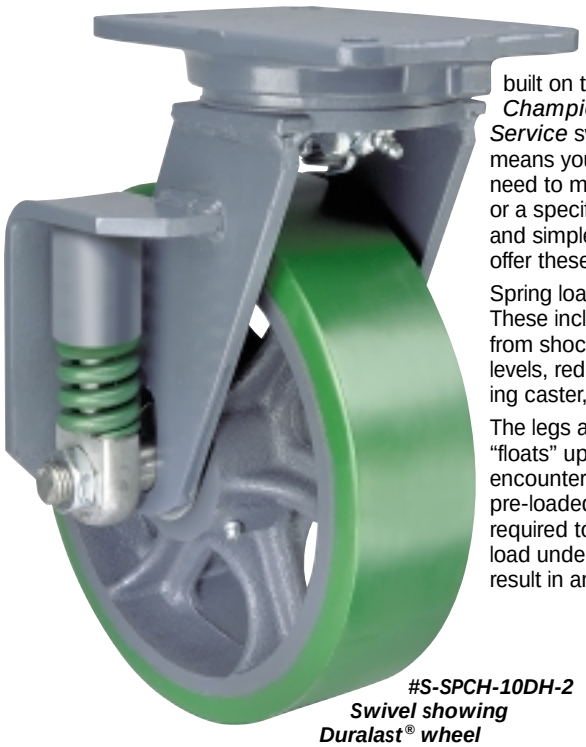

#S-SPCH-10DH-2 Swivel showing Duralast® wheel

Hamilton's newly available shock absorbing casters are built on the proven and reliable *Champion, Workhorse* and *Heavy Service* swivel caster platforms. This means you have lots of flexibility if you need to match an existing bolt hole pattern or a specific capacity range. The unique and simple design enables Hamilton to offer these at extremely competitive prices.

Spring loaded casters offer many benefits. These include protecting delicate cargo from shock and vibration, reducing noise levels, reducing wear on floors and extending caster, wheel and bearing life.

The legs are slotted such that the axle "floats" up and down as the wheel encounters obstacles. Since the spring is pre-loaded, the minimum capacity is required to cause the spring to yield. (A load under the minimum capacity may not result in any absorption of shock.)

At the maximum capacity, the spring will have compressed approximately one-half of its length. Overloading a shock-absorbing caster will cause the axle to reach its travel limit, resulting in no shock absorbing benefit.

These casters can be easily modified to accommodate many custom specification requirements. Our engineering department will assist you if you have special application issues.

NEVER DISASSEMBLE A SPRING-LOADED CASTER OR REMOVE THE WHEEL FROM THE CASTER.

The springs contain a tremendous amount of stored energy and serious injury could occur. This should only be done by trained factory personnel.

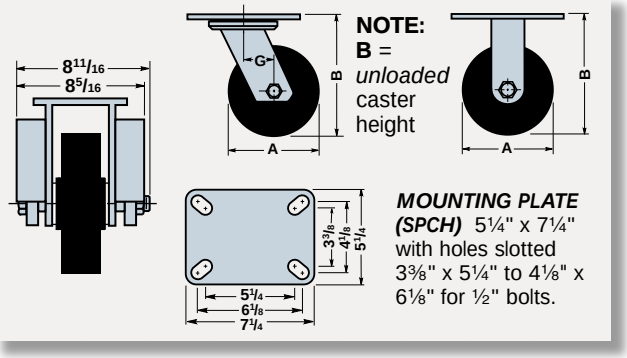

Wheel Types

Duralast® Plastex Poly-Soft® M.O. Rubber Unilast®

When ordering, specify Spring 1 or Spring 2 as a suffix to the Catalog Number: e.g. S-SPCH-83DH-2

CHAMPION CASTER

Dimensions in Inches

Wheel				Swivel Caster			Rigid Caster			Spring 1 Cap.Lbs.		Spring 2 Cap.Lbs.		Overall Height	Swivel Offset
Dia. A	Face	Type	Replacement Number ¤	Catalog No. Roller/Prec.BB	Catalog No. Tapered Brgs.	Wt. Lbs.	Catalog No. Roller/Prec.BB.	Catalog No. Tapered Brgs.	Wt. Lbs.	Min.	Max.	Min.	Max.	B	G
6	2½	Duralast®	W-625-D-1	S-SPCH-6DH-	S-SPCH-6DT-	33	R-SPCH-6DH-	R-SPCH-6DT	29	140	850	270	1500	11¼	2½
		Plastex	W-625-P-1	S-SPCH-6PH-	S-SPCH-6PT-	27	R-SPCH-6PH-	R-SPCH-6PT-	23	140	850	270	1630		
		M.O. Rubber	W-625-R-1	S-SPCH-6RH-1	S-SPCH-6RT-1	32	R-SPCH-6RH-1	R-SPCH-6RT-1	28	140	540	X	X		
	3	Duralast®	W-630-D-1	S-SPCH-63DH-	S-SPCH-63DT-	34	R-SPCH-63DH-	R-SPCH-63DT-	30	140	850	270	1630		
		Plastex	W-630-P-1	S-SPCH-63P-	S-SPCH-63PT-	28	R-SPCH-63P-	R-SPCH-63PT-	24	140	850	270	1630		
		Poly-Soft®	W-630-SPB-¾	S-SPCH-63SPB-	S-SPCH-63SPT-	34	R-SPCH-63SPB-	R-SPCH-63SPT-	30	140	850	270	1630		
		M.O. Rubber	W-630-R-1	S-SPCH-63RH-1	X	34	R-SPCH-63RH-1	X	32	140	680	X	X		
8	2½	Duralast®	W-825-D-1	S-SPCH-8DH-	S-SPCH-8DT-	39	R-SPCH-8DH-	R-SPCH-8DT	37	140	850	270	1630	12¼	2½
		Plastex	W-825-P-1	S-SPCH-8PH-	S-SPCH-8PT-	30	R-SPCH-8PH-	R-SPCH-8PT-	28	140	850	270	1630		
		M.O. Rubber	W-825-R-1	S-SPCH-8RH-1	S-SPCH-8RT-1	33	R-SPCH-8RH-1	R-SPCH-8RT-1	31	140	670	X	X		
	3	Duralast®	W-830-D-1	S-SPCH-83DH-	S-SPCH-83DT-	40	R-SPCH-83DH-	R-SPCH-83DT-	38	140	850	270	1630		
		Plastex	W-830-P-1	S-SPCH-83PH-	S-SPCH-83PT-	32	R-SPCH-83PH-	R-SPCH-83PT-	30	140	850	270	1630		
		Poly-Soft®	W-830-SPB-¾	S-SPCH-83SPB-	S-SPCH-83SPT-	40	R-SPCH-83SPB-	R-SPCH-83SPT-	38	140	850	270	1630		
		M.O. Rubber	W-830-R-1	S-SPCH-83RH-1	S-SPCH-83RT-1	39	R-SPCH-83RH-1	R-SPCH-83RT-1	37	140	840	X	X		
10	2½	Duralast®	W-1025-D-1	S-SPCH-10DH-	S-SPCH-10DT-	38	R-SPCH-10DH-	R-SPCH-10DT	36	140	850	270	1630	14¼	2½
		Plastex	W-1025-P-1	S-SPCH-10PH-	S-SPCH-10PT-	34	R-SPCH-10PH-	R-SPCH-10PT-	32	140	850	270	1630		
		M.O. Rubber	W-1025-R-1	S-SPCH-10RH-1	S-SPCH-10RT-1	36	R-SPCH-10RH-1	R-SPCH-10RT-1	34	140	790	X	X		
	3	Duralast®	W-1030-D-1	S-SPCH-13DH-	S-SPCH-13DT-	44	R-SPCH-13DH-	R-SPCH-13DT-	42	140	850	270	1630		
		Plastex	W-1030-P-1	S-SPCH-13PH-	S-SPCH-13PT-	37	R-SPCH-13PH-	R-SPCH-13PT-	35	140	850	270	1630		
		Poly-Soft®	W-1030-SPB-¾	S-SPCH-13SPB-	S-SPCH-13SPT-	44	R-SPCH-13SPB-	R-SPCH-13SPB-	42	140	850	270	1630		
		M.O. Rubber	W-1030-R-1	S-SPCH-13RH-	S-SPCH-13RT-	40	R-SPCH-13RH-	R-SPCH-13RT-	38	140	850	270	1000		
12	3	Duralast®	W-1230-D-1	S-SPCH-12DH-	S-SPCH-12DT-	63	R-SPCH-12DH-	R-SPCH-12DT-	61	140	850	270	1630	16¼	2½
		Plastex	W-1230-P-1	S-SPCH-12PH-	S-SPCH-12PT-	38	R-SPCH-12PH-	R-SPCH-12PT-	36	140	850	270	1630		
		Poly-Soft®	W-1230-SPB-¾	S-SPCH-12SPB-	S-SPCH-12SPT-	63	R-SPCH-12SPB-	R-SPCH-12SPT-	61	140	850	270	1630		
		M.O. Rubber	W-1230-R-1	S-SPCH-12RH-	S-SPCH-12RT-	45	R-SPCH-12RH-	R-SPCH-12RT-	43	140	850	270	1140		

¤ With straight roller or precision ball bearings. For catalog number of corresponding tapered bearing wheels, consult factory.

Spring Loaded Casters *(Patent No. 09687872) (cont'd)*

Series SP — Cap. to 1,220 lbs.

#S-SPWH-8D-1 Swivel

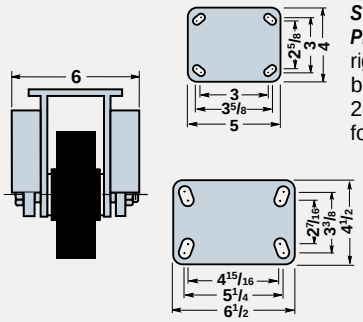

SWIVEL MOUNTING PLATE (SPWH) 4" x 5", rigid plate 4" x 4½", both with holes slotted 2⅝" x 3⅝" to 3" x 3" for ⅜" bolts.

MOUNTING PLATE (SPHS) 4½" x 6½" with holes slotted 2 7⁄16" x 4 15⁄16" to 3⅜" x 5¼" for ½" bolts.

#S-SPHS-5R-1 Swivel showing Moldon Rubber wheel

When ordering, specify Spring 1 or Spring 2 as a suffix to the Catalog Number: e.g. S-SPWH-6D-2

WORKHORSE CASTER

Dimensions in Inches

Wheel				Swivel Caster			Rigid Caster			Spring 1 Cap.Lbs.		Spring 2 Cap.Lbs.		Overall Height	Swivel Offset
Dia. A	Face	Type	Replacement Number¤	Catalog No. Roller/Prec.BB	Catalog No. Tapered Brgs.	Wt. Lbs.	Catalog No. Roller/Prec.BB	Catalog No. Tapered Brgs.	Wt. Lbs.	Min.	Max.	Min.	Max.	B	G
4	2	Duralast®	W-420-DB-½	S-SPWH-4DB-	X	12¾	R-SPWH-4DB-	X	10	125	620	280	750	6 1⁄16	2
		Plastex	W-420-P-¾	S-SPWH-4P-	X	10¼	R-SPWH-4P-	X	7½	125	620	280	800		
		Poly-Soft®	W-420-SPB-½	S-SPWH-4SPB-	X	12¾	R-SPWH-4SPB-	X	10	125	600	280	600		
		M.O. Rubber	W-420-R-¾	S-SPWH-4R-1	X	12¼	R-SPWH-4R-1	X	9½	125	300	X	X		
		Unilast®	W-420-UYB-½	S-SPWH-4UYB-	X	9¾	R-SPWH-4UYB-	X	7	125	620	280	750		
5	2	Duralast®	W-520-DB-½	S-SPWH-5DB-	S-SPWH-5DT-	13¼	R-SPWH-5DB-	R-SPWH-5DT-	10½	125	620	280	1050	7 3⁄16	
		Plastex	W-520-P-¾	S-SPWH-5P-	X	10¾	R-SPWH-5P-	X	8	125	620	280	1000		
		Poly-Soft®	W-520-SPB-½	S-SPWH-5SPB-	S-SPWH-5SPT-	12¾	R-SPWH-5SPB-	R-SPWH-5SPT-	9¾	125	620	280	840		
		M.O. Rubber	W-520-R-¾	S-SPWH-5R-1	X	12½	R-SPWH-5R-1	X	9¾	125	350	X	X		
		Unilast®	W-520-UYB-½	S-SPWH-5UYB-	X	10	R-SPWH-5UYB-	X	7¼	125	620	280	900		
6	2	Duralast®	W-620-DB-½	S-SPWH-6DB-	S-SPWH-6DT-	14½	R-SPWH-6DB-	R-SPWH-6DT	11¾	125	620	280	1200	8 3⁄16	2¼
		Plastex	W-620-P-¾	S-SPWH-6P-	X	11½	R-SPWH-6P-	X	8¾	125	620	280	1200		
		Poly-Soft®	W-620-SPB-½	S-SPWH-6SPB-	S-SPWH-6SPT-	13¼	R-SPWH-6SPB-	R-SPWH-6SPT-	11¾	125	620	280	960		
		M.O. Rubber	W-620-R-¾	S-SPWH-6R-1	S-SPWH-6RT-1	13¼	R-SPWH-6R-1	R-SPWH-6RT-1	10½	125	410	X	X		
		Unilast®	W-620-UYB-½	S-SPWH-6UYB-	X	10½	R-SPWH-6UYB-	X	7¾	125	620	280	1100		
8	2	Duralast®	W-820-DB-½	S-SPWH-8DB-	S-SPWH-8DT-	18	R-SPWH-8DB-	R-SPWH-8DT-	15	125	620	280	1220	10 3⁄16	2¾
		Plastex	W-820-P-¾	S-SPWH-8P-	X	13½	R-SPWH-8P-	X	10½	125	620	280	1220		
		Poly-Soft®	W-820-SPB-½	S-SPWH-8SPB-	S-SPWH-8SPT-	18	R-SPWH-8SPB-	R-SPWH-8SPT-	11¾	125	620	280	1200		
		M.O. Rubber	W-820-R-¾	S-SPWH-8R-1	X	16¼	R-SPWH-8R-1	X	13¼	125	500	X	X		
		Unilast®	W-820-UYB-½	S-SPWH-8UYB-	X	12	R-SPWH-8UYB-	X	9	125	620	280	1200		

When ordering, specify Spring 1 or Spring 2 as a suffix to the Catalog Number: e.g. S-SPHS-6D-1

HEAVY SERVICE CASTER

Dimensions in Inches

Wheel				Swivel Caster			Rigid Caster			Spring 1 Cap.Lbs.		Spring 2 Cap.Lbs.		Overall Height	Swivel Offset
Dia. A	Face	Type	Replacement Number¤	Catalog No. Roller/Prec.BB	Catalog No. Tapered Brgs.	Wt. Lbs.	Catalog No. Roller/Prec.BB	Catalog No. Tapered Brgs.	Wt. Lbs.	Min.	Max.	Min.	Max.	B	G
4	2	Duralast®	W-420-DB-½	S-SPHS-4DB-	X	14¼	R-SPHS-4DB-	X	10¾	125	620	280	750	6 1⁄16	2
		Plastex	W-420-P-¾	S-SPHS-4P-	X	11¾	R-SPHS-4P-	X	12½	125	620	280	800		
		Poly-Soft®	W-420-SPB-½	S-SPHS-4SPB-	X	14¼	R-SPHS-4SPB-	X	10¾	125	600	280	600		
		M.O. Rubber	W-420-R-¾	S-SPHS-4R-1	X	13¾	R-SPHS-4R-1	X	10¼	125	300	X	X		
		Unilast®	W-420-UYB-½	S-SPHS-4UYB-	X	11¼	R-SPHS-4UYB-	X	7¾	125	620	280	750		
5	2	Duralast®	W-520-DB-½	S-SPHS-5DB-	S-SPHS-5DT-	14¾	R-SPHS-5DB-	R-SPHS-5DT-	11¼	125	620	280	1050	7 3⁄16	
		Plastex	W-520-P-¾	S-SPHS-5P-	X	12¼	R-SPHS-5P-	X	8¾	125	620	280	1000		
		Poly-Soft®	W-520-SPB-½	S-SPHS-5SPB-	S-SPHS-5SPT-	14¾	R-SPHS-5SPB-	R-SPHS-5SPT-	11¼	125	620	280	840		
		M.O. Rubber	W-520-R-¾	S-SPHS-5R-1	X	14	R-SPHS-5R-1	X	10½	125	350	X	X		
		Unilast®	W-520-UYB-½	S-SPHS-5UYB-	X	11½	R-SPHS-5UYB-	X	8	125	620	280	900		
6	2	Duralast®	W-620-DB-½	S-SPHS-6DB-	S-SPHS-6DT-	16	R-SPHS-6DB-	R-SPHS-6DT	12½	125	620	280	1200	8 3⁄16	2¼
		Plastex	W-620-P-¾	S-SPHS-6P-	X	13	R-SPHS-6P-	X	9½	125	620	280	1200		
		Poly-Soft®	W-620-SPB-½	S-SPHS-6SPB-	S-SPHS-6SPT-	16	R-SPHS-6SPB-	R-SPHS-6SPT-	11¾	125	620	280	960		
		M.O. Rubber	W-620-R-¾	S-SPHS-6R-1	S-SPHS-6RT-1	14¾	R-SPHS-6R-1	R-SPHS-6RT-1	11½	125	410	X	X		
		Unilast®	W-620-UYB-½	S-SPHS-6UYB-	X	12	R-SPHS-6UYB-	X	8½	125	620	280	1100		
8	2	Duralast®	W-820-DB-½	S-SPHS-8DB-	S-SPHS-8DT-	19½	R-SPHS-8DB-	R-SPHS-8DT-	15¾	125	620	280	1220	10 3⁄16	2¾
		Plastex	W-820-P-¾	S-SPHS-8P-	X	15	R-SPHS-8P-	X	11¼	125	620	280	1220		
		Poly-Soft®	W-820-SPB-½	S-SPWH-8SPB-	S-SPWH-8SPT-	19½	R-SPHS-8SPB-	R-SPHS-8SPT-	15¾	125	620	280	1200		
		M.O. Rubber	W-820-R-¾	S-SPHS-8R-1	X	17¾	R-SPHS-8R-1	X	14	125	500	X	X		
		Unilast®	W-820-UYB-½	S-SPHS-8UYB-	X	13½	R-SPHS-8UYB-	X	9¾	125	620	280	1200		

¤ With straight roller or precision ball bearings. For catalog number of corresponding tapered bearing wheels, consult factory.